Rotary Encoders
RE Series

RE0131PVB

(Insulated Shaft)
(Bracket Type)

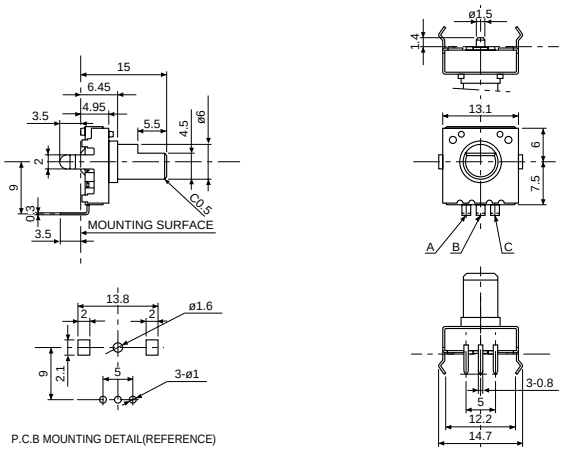

REB161PVB

(Insulated Shaft)

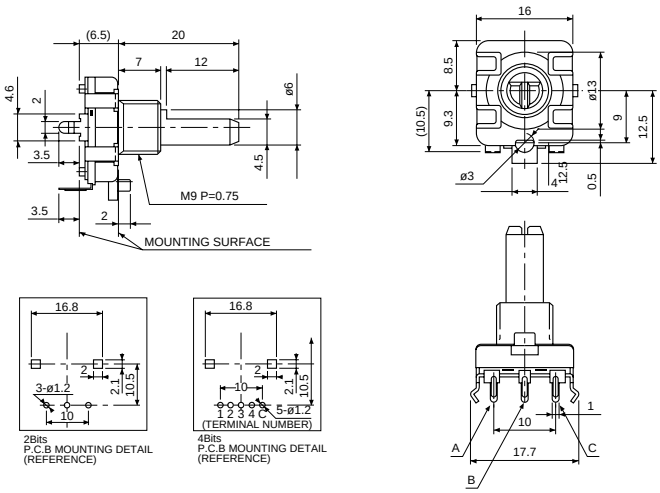

REB161PHD

(Insulated Shaft)

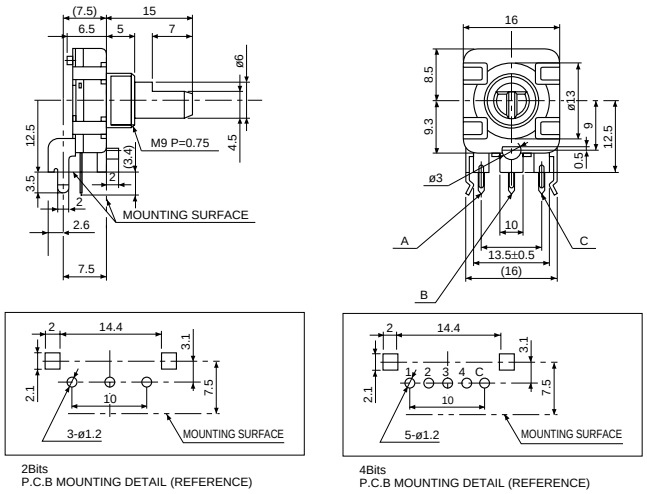

INCREMENTAL OUTPUT SIGNAL (for RE0131)

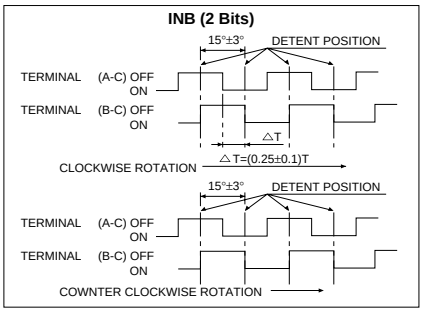

INCREMENTAL OUTPUT SIGNAL (for REB161)

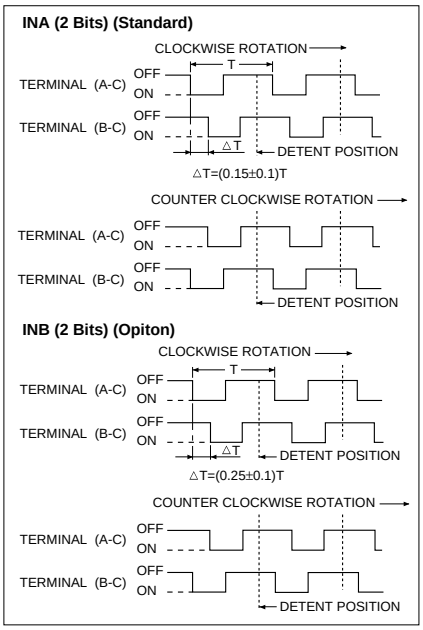

SPECIFICATIONS

	RE0131	REB161	
Type of Output Signal	INB (2 Bits)	INA, INB (2 Bits)	GRY (4 Bits)
Operating Temperature Range	–10 to 70°C	–10 to 70°C	
Rated Voltage/Rated Current	DC 5V 0.5mA	DC 5V 0.5mA	DC 12V 4mA
Resolution	12 Pulses/360°	24 Pulses/360°	4Bits 16 Pulses/360°
Total Rotational Angle	360° Endless	3360° Endless	360° Endless
Detent Position and Angle	24 Detents 15±3°	24 Detents 15±3°	16 Detents 22.5±3°
Detent Torque	1.5 to 15 mN·m	3 to 20 mN·m	
Rotational Life	50,000 cycles	100,000 (INA) 50,000 (INB) cycles	50,000 cycles

NOBLE

- Specifications in this catalog are presented basically for informative purposes. We request the exchange of official approval drawings before placing order.